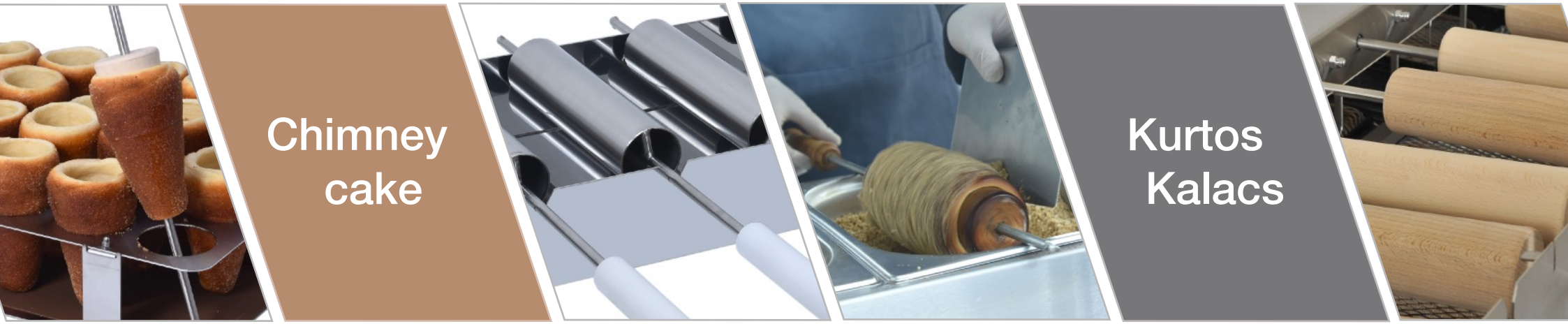

doberkürtős

training academy, equipment & premium bakery mixes

www.kurtos-kalacs.com

DATE: 05.10.2026

PRICES:

- All prices are quoted in Euros.

TAXES:

- The listed prices do not include sales tax. (known as VAT, DDV, TVA, IVA, AFA etc). Sales tax is applied on top of the published prices & it is charged at the rate of the Republic of Slovenia where our business is registered. The current rate of VAT in The Republic of Slovenia is:
    - 22% on goods & services
    - 9.5% on food (Kurtos Kalacs EASY mix)
- For goods shipped outside the EU, no VAT will be applied to the purchase. However, once the goods reach the non-EU destination, local customs authorities may impose additional fees, such as administrative charges, as well as taxes (including import duties and/or sales tax) in accordance with the local import regulations. We are unable to provide specific information on the import processes, taxes, and fees for each country. Therefore, we recommend researching your country's procedures and inquiring about any applicable taxes and fees prior to placing your order, so you are fully informed of what to expect. To obtain more information on this subject, we recommend contacting our shipping partners in your country, such as DHL or FedEx or seek advice from a customs broker.
- For goods shipped within the EU, VAT will be charged at the current rate applicable in the Republic of Slovenia, unless the buyer provides a valid European VAT number. In that case, no VAT will be applied to the purchase. The European VAT number must be verified on the EU website **(http://ec.europa.eu/taxation_customs/vies/**) before any sale can be made without sales tax.

TO RECEIVE A QUOTATION:

- The listed prices exclude packaging, insurance, and shipping costs. To provide an accurate shipping quote, we require details of your order to calculate the package's weight and dimensions. Shipping costs are based on these factors, along with the delivery address.
- If you'd like a no-obligation quote or wish to place an order, please email us at info@kurtos-kalacs.com with the following details:
    - A list of the equipment and the quantity of each item you would like to order.
    - Full name of the recipient.
    - Business name (if applicable).
    - Invoice address.
    - Shipping address.
    - VAT (sales tax) number if you're within the European Union and have one. EIN & Dunns number if in the USA.
    - Contact telephone number(s)

INCLUDED WITH EACH BAKING MACHINE PURCHASE:

- Reliable recipe & video tutorials.
- Comprehensive user manual for baking machines (in English).
- Easy to follow assembly manuals for accessories.

Electric grill 6 ECO

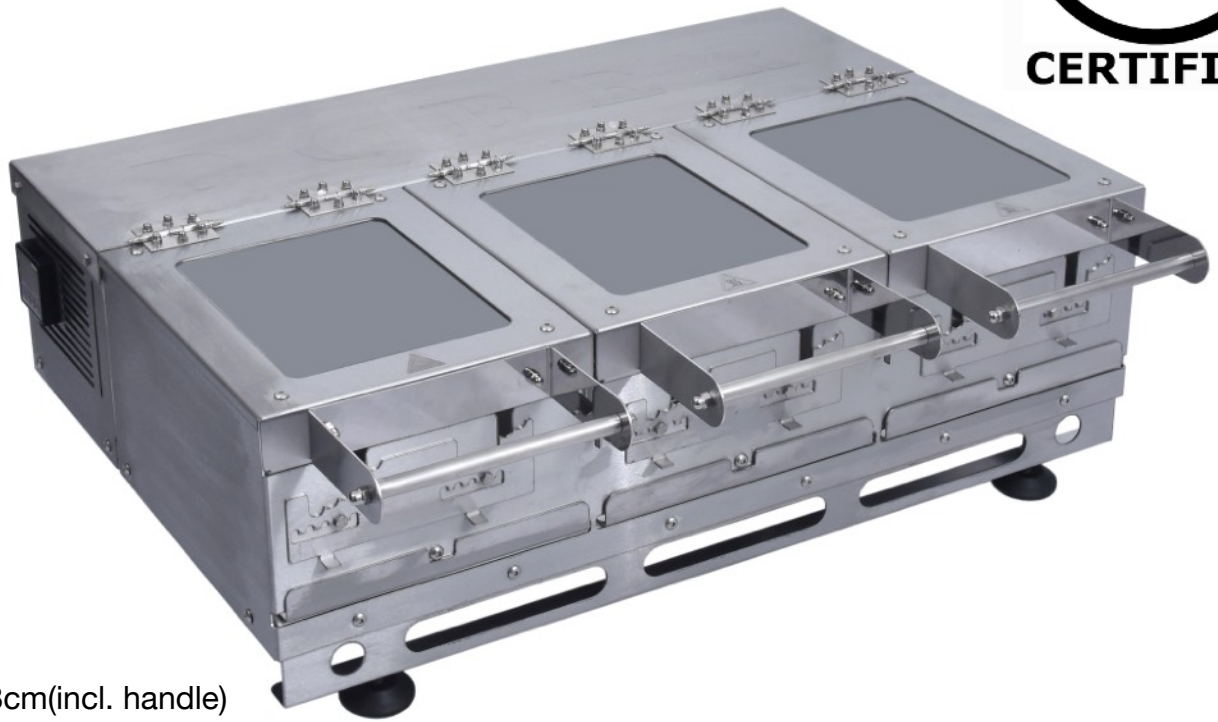

1840.00€ **(excl. VAT)**

Model No:	DK-E6 ECO DIGITAL
Capacity:	6 pieces in one bake
Ave. production:	60 pieces/h
Glass:	**heat reflective glass**
Weight:	24kg
Size:	H: 24cm W: 70cm D: 58cm(incl. handle)
Rated power:	3 x 1,0kW
Material:	Brushed stainless steel

Electric oven 8 ECO

NSF CERTIFIED

1540.00€ **(excl. VAT)**

Model No:	DK-E8 ECO DIGITAL
Capacity:	8 pieces in one bake
Ave. production:	70 pieces/h
Glass:	**heat reflective glass**
Weight:	18kg
Size:	H: 55cm W: 24cm D: 42cm
Operational space:	W: 79 cm (oven with open door)
Rated power:	2 x 1,6kW
Material:	Brushed stainless steel

Electric oven 4

1190.00€ **(excl. VAT)**

Model No:	DK-E4 DIGITAL
Capacity:	4 pieces in one bake
Ave. production:	35 pieces/h
Glass:	**heat reflective glass**
Weight:	12kg
Size:	H: 32cm W: 24cm D: 42cm
Operational space:	W: 79 cm (oven with open door)
Rated power:	1,6kW
Material:	Brushed stainless steel

Electric oven 12 ECO

1790.00€ (excl. VAT)

Model No:	DK-E12 ECO DIGITAL
Capacity:	12 pieces in one bake
Ave. production:	90 pieces/h
Glass:	**heat reflective glass**
Weight:	27kg
Size:	H: 79cm W: 26cm D: 42cm
Operational space:	W: 81 cm (oven with open door)
Rated power:	3 x 1,6kW
Material:	Brushed stainless steel
Voltage:	380-400V

Kurtos bakery mix - ORIGINAL

R1 premium original - concentrate mix

Neto weight: 10kg
STANDARD SIZE (170g): 450 pieces / bag
CONE SIZE (90g): 850 pieces / bag

1 - 26 bags: 62.00€ (excl. VAT) / per bag

27 bags or more: 59.00€ (excl. VAT) / per bag

For pricing on larger quantities, please inquire.

R2 premium original - complete mix

Neto weight: 10kg
STANDARD SIZE (170g): 90 pieces / bag
CONE SIZE (90g): 170 pieces / bag

1 - 26 bags: 32.00€ (excl. VAT) / per bag

27 - 53 bags: 30.00€ (excl. VAT) / per bag

54 bags or more: 28.00€ (excl. VAT) / per bag

For pricing on larger quantities, please inquire.

Kurtos bakery mix - VEGAN STYLE

R4 vegan style - complete mix

Neto weight: 10kg
STANDARD SIZE (170g): 90 pieces / bag
CONE SIZE (90g): 170 pieces / bag

1 - 26 bags: 38.00€ (excl. VAT) / per bag

27 - 53 bags: 36.00€ (excl. VAT) / per bag

54 bags or more: 34.00€ (excl. VAT) / per bag

For pricing on larger quantities, please inquire.

Roll surface tower 20

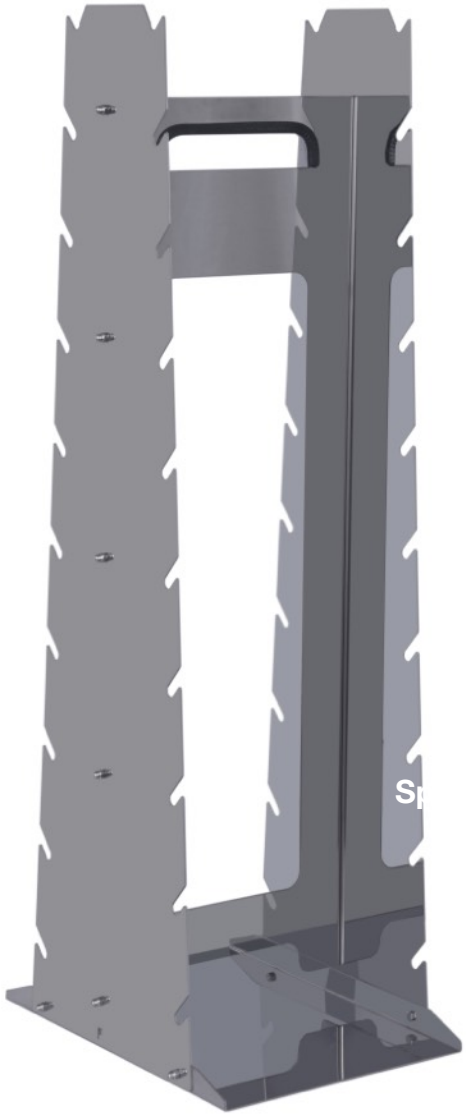

210.00€ **(excl. VAT)**

Roll surface tower 20

Capacity: 20 cooking rolls
Size: H: 88cm W: 25cm D: 33cm
Material: Stainless steel

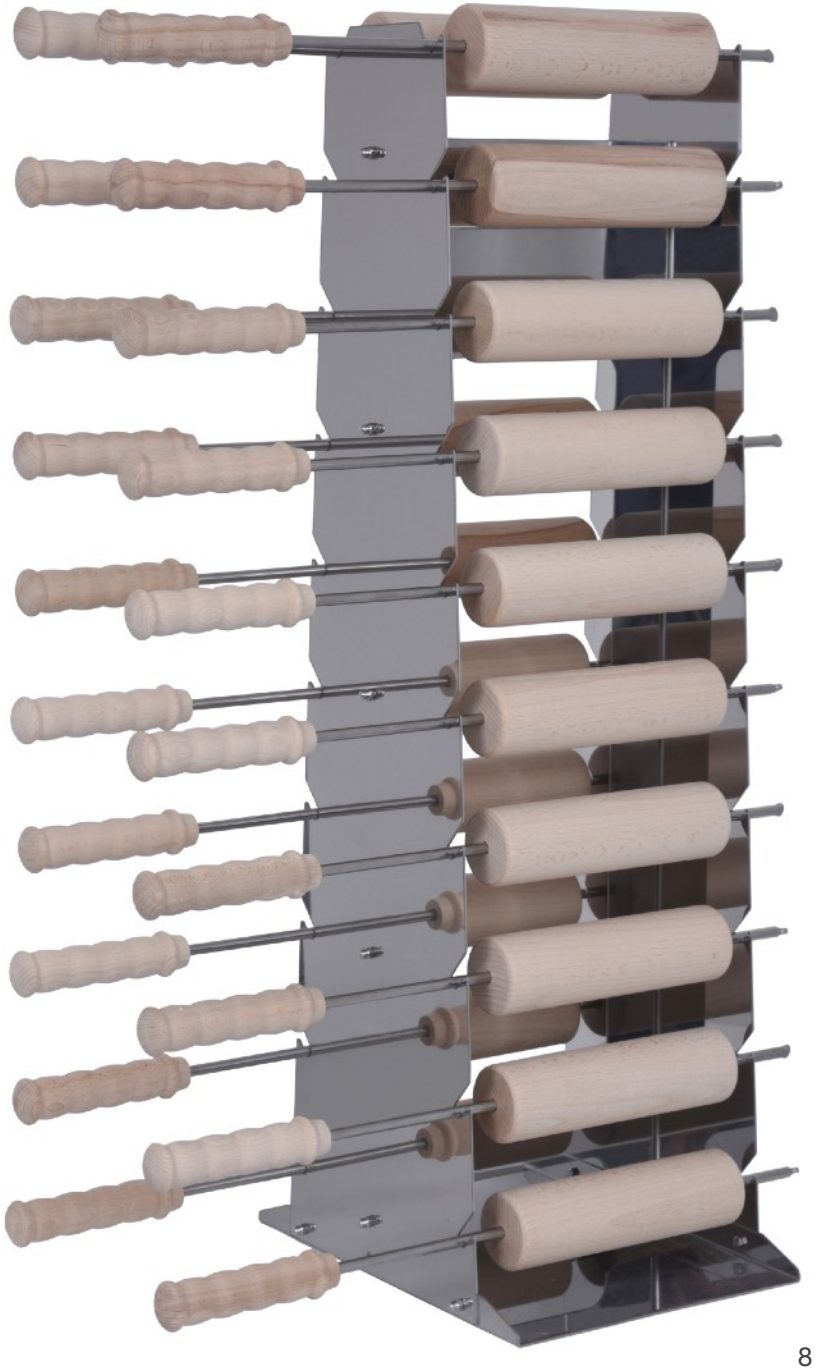

Roll wall rack

80.00€ **(excl. VAT)**

Roll wall rack

Capacity: 10 cooking rolls
Size: H: 103cm W: 25cm D: 13cm
Material: Stainless steel

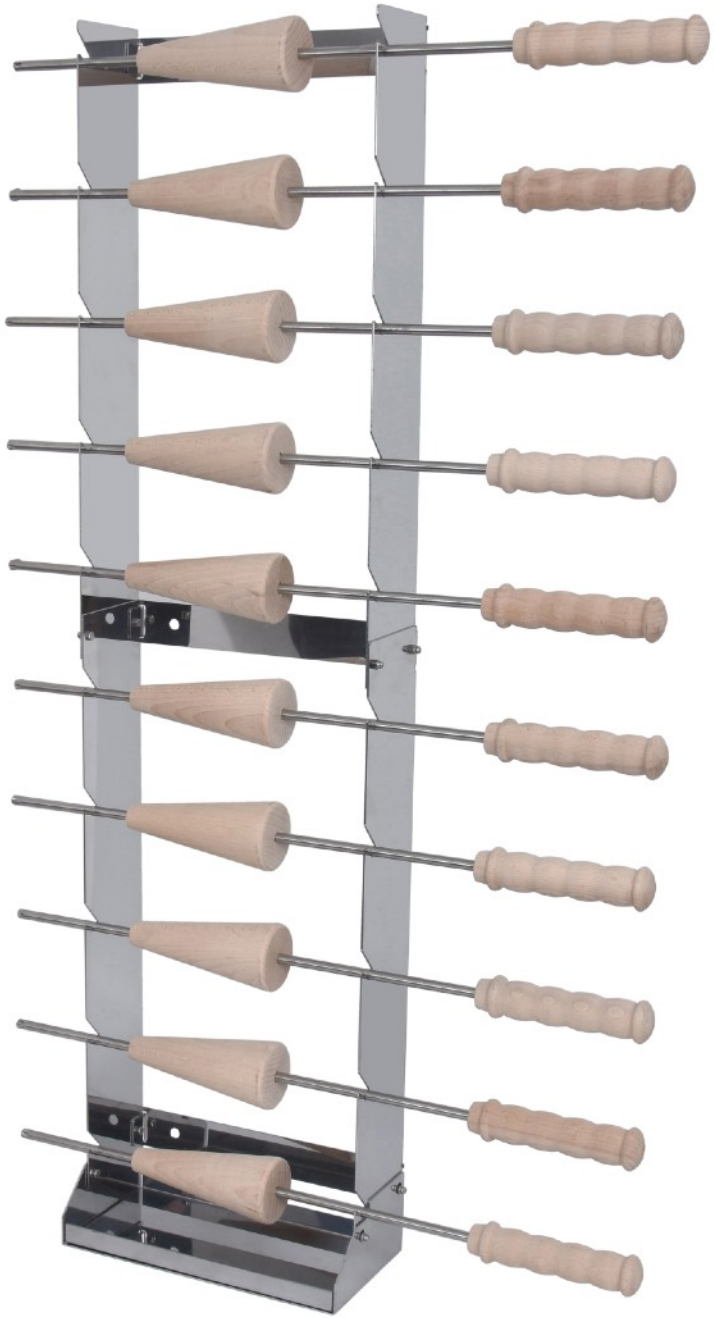

Roll surface racks

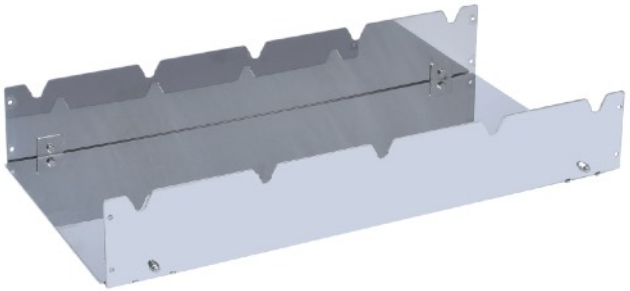

45.00€ (excl. VAT)

Roll surface rack - single

Capacity: 5 cooking rolls
Size: H: 7.5cm W: 50cm D: 25cm
Material: Stainless steel

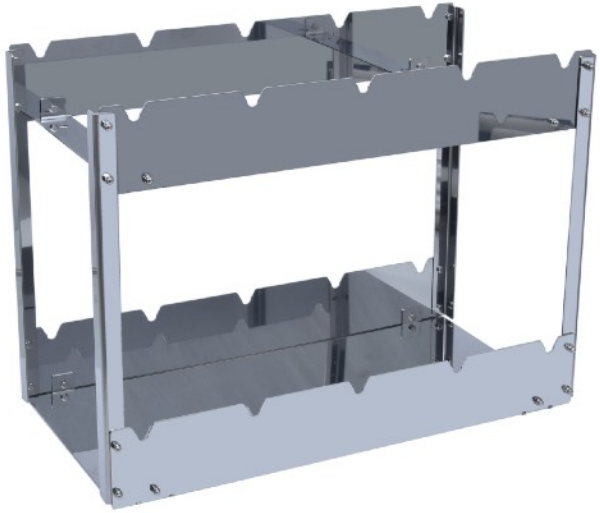

95.00€ (excl. VAT)

Roll surface rack - double

Capacity: 10 cooking rolls
Size: H: 36cm W: 50cm D: 25cm
Material: Stainless steel

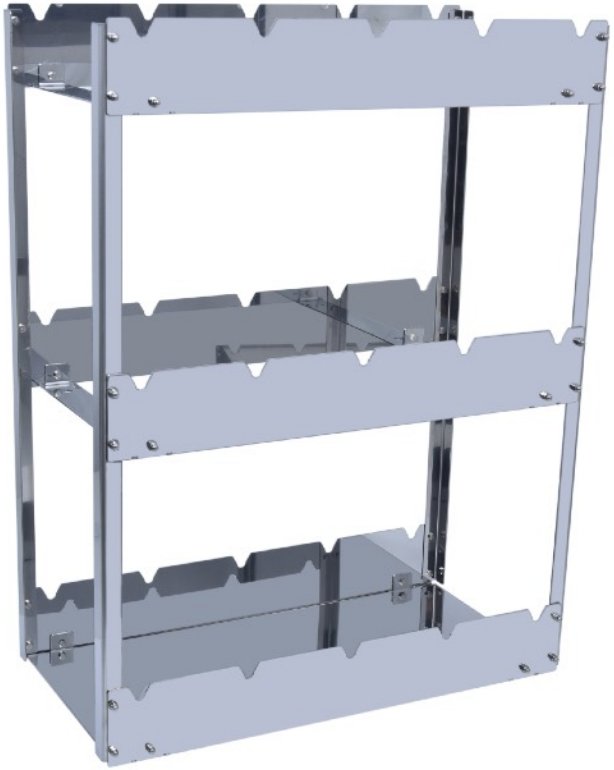

130.00€ (excl. VAT)

Roll surface rack - triple

Capacity: 15 cooking rolls
Size: H: 65cm W: 50cm D: 25cm
Material: Stainless steel

Wooden CONE rolls (beech wood)

Re-designed & engineered front pin resulting in:

- Smoother rotation.
- Less resistance from rotary motor screw point.
- Less chance of damaging rotary motor when removing.

18.00€ (excl. VAT)

Wooden roll - cone 10

Cooking area: 10cm
Weight: 265g
Diameter: 2-4.5cm

18.00€ (excl. VAT)

Wooden roll - cone 13

Cooking area: 13cm
Weight: 354g
Diameter: 2-5.5cm

18.00€ (excl. VAT)

Wooden roll - cone 16

Cooking area: 16cm
Weight: 556g
Diameter: 2-6cm

Wooden rolls (beech wood)

Re-designed & engineered front pin resulting in:

- Smoother rotation.
- Less resistance from rotary motor screw point.
- Less chance of damaging rotary motor when removing.

18.00€ (excl. VAT)

Wooden roll - standard

Cooking area: 20cm
Weight: 560g
Diameter: 5.5cm

18.00€ (excl. VAT)

Wooden roll - long thin

Cooking area: 20cm
Weight: 324g
Diameter: 3.5cm

18.00€ (excl. VAT)

Wooden roll - small

Cooking area: 13cm
Weight: 324g
Diameter: 3.5cm (conical)

Stainless steel CONE rolls

Re-designed & engineered front pin resulting in:

- Smoother rotation.
- Less resistance from rotary motor screw point.
- Less chance of damaging rotary motor when removing.

47.00€ (excl. VAT)

Stainless steel roll - cone 13

Cooking area: 13cm
Weight: 350g
Diameter: 2,5-6cm

47.00€ (excl. VAT)

Stainless steel roll - cone 10

Cooking area: 10cm
Weight: 322g
Diameter: 2-4.8cm

Stainless steel rolls

Re-designed & engineered front pin resulting in:

- Smoother rotation.
- Less resistance from rotary motor screw point.
- Less chance of damaging rotary motor when removing.

47.00€ (excl. VAT)

Stainless steel roll - standard

Cooking area: 20cm
Weight: 620g
Diameter: 5cm

43.00€ (excl. VAT)

Stainless steel roll - small

Cooking area: 20cm
Weight: 470g
Diameter: 3cm

40.00€ (excl. VAT)

Stainless steel roll - mini

Cooking area: 20cm
Weight: 446g
Diameter: 2cm

Cutters

80.00€ **(excl. VAT)**

Kurtos cutter

Size: H: 5.5cm L: 35cm W: 21.5cm
Material: Stainless steel

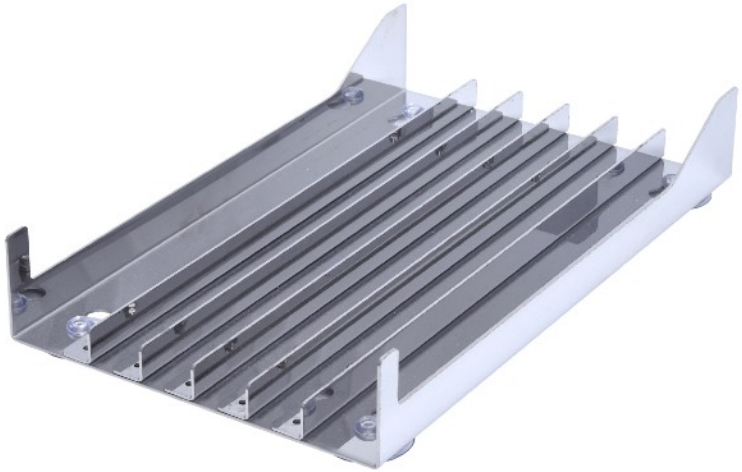

80.00€ **(excl. VAT)**

Kurtos cutter - party

Size: H: 5.5cm L: 35cm W: 21.5cm
Material: Stainless steel

Sugar blade

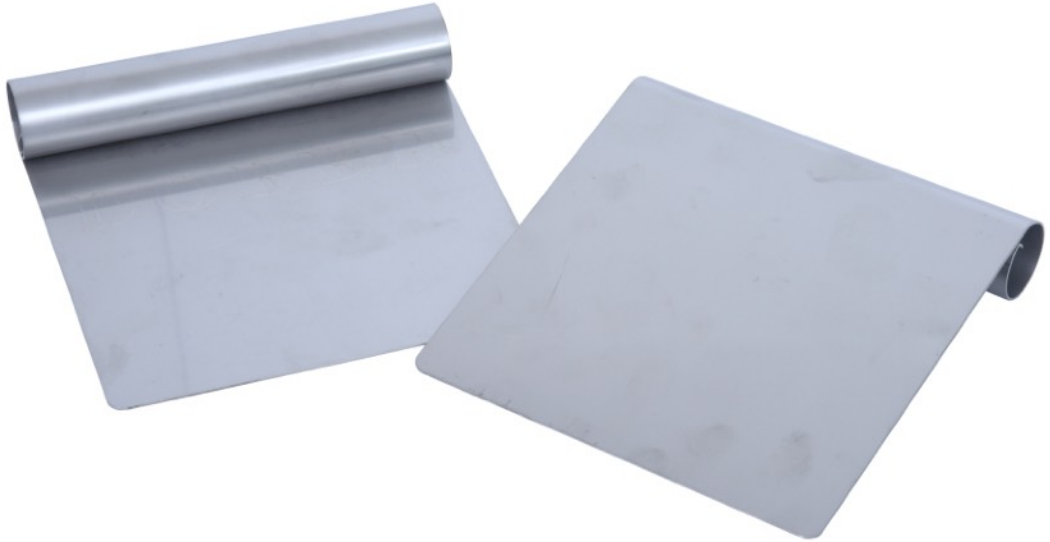

20.00€ **(excl. VAT)**

Sugar blade (2 pcs)

Size: L: 13cm
Material: Stainless steel

Topping blade

24.00€ **(excl. VAT)**

Topping blade (2 pcs)

Size: L: 20cm
Material: Stainless steel

Kurtos spanner

15.00€ **(excl. VAT)**

Kurtos spanner

Material: Stainless steel

Kurtos roller

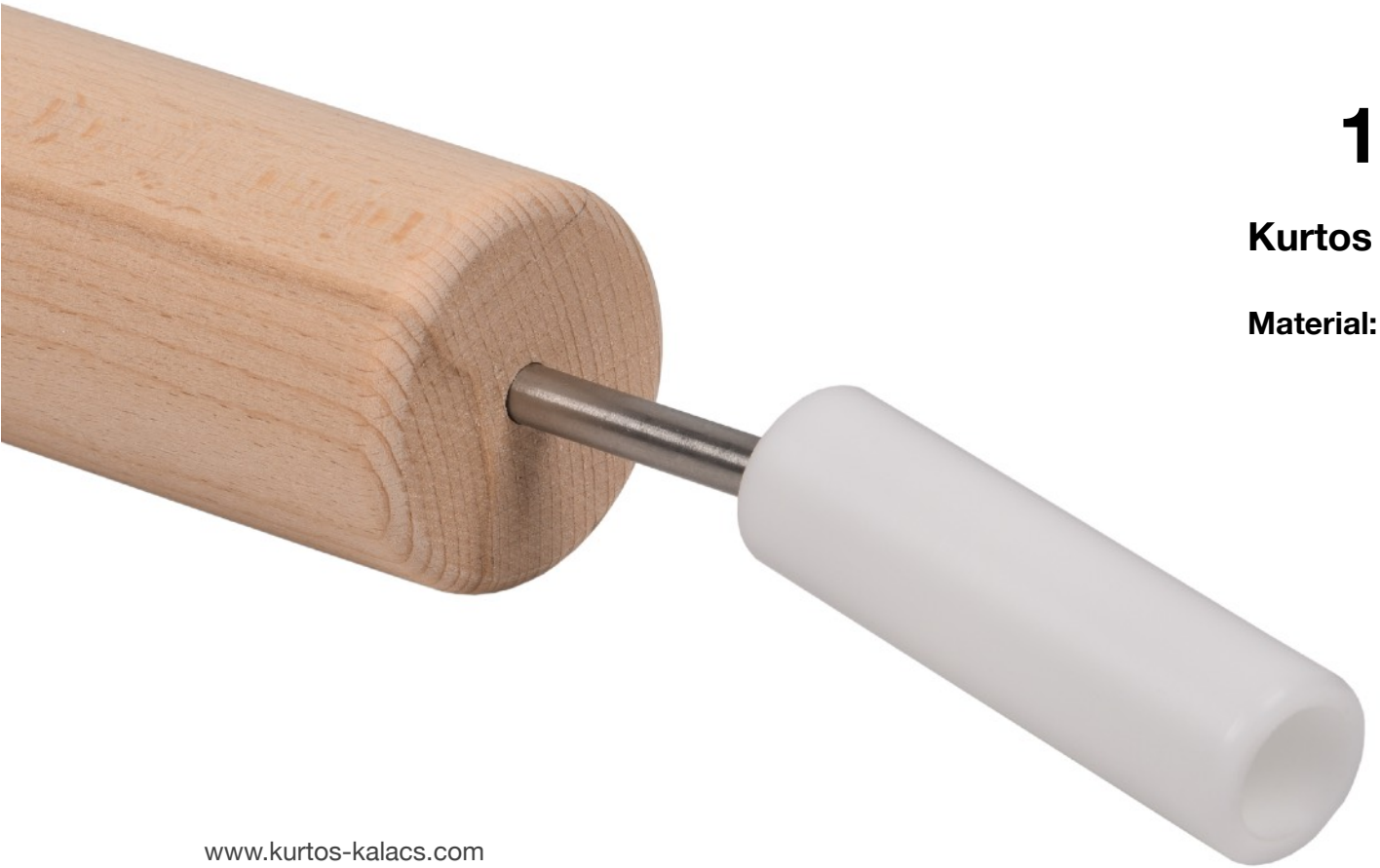

10.00€ **(excl. VAT)**

Kurtos roller

Material: POM

Oil container with lid

22.00€ **(excl. VAT)**

Oil container with lid

Material: Stainless steel body + plastic lid
Volume: 600ml + 400ml

Dough brush

20.00€ **(excl. VAT)**

Dough brush 60mm

Material: Bristles are natural, bleached, naphthalene-free; Handle is durable, food-safe glass-fiber reinforced polyamide (a strong, food-safe plastic)

Cone holders

120.00€ **(excl. VAT)**

Cone holder - single

Capacity: 20 cones
Size: H: 8cm W: 40cm D: 30cm
Material: Stainless steel

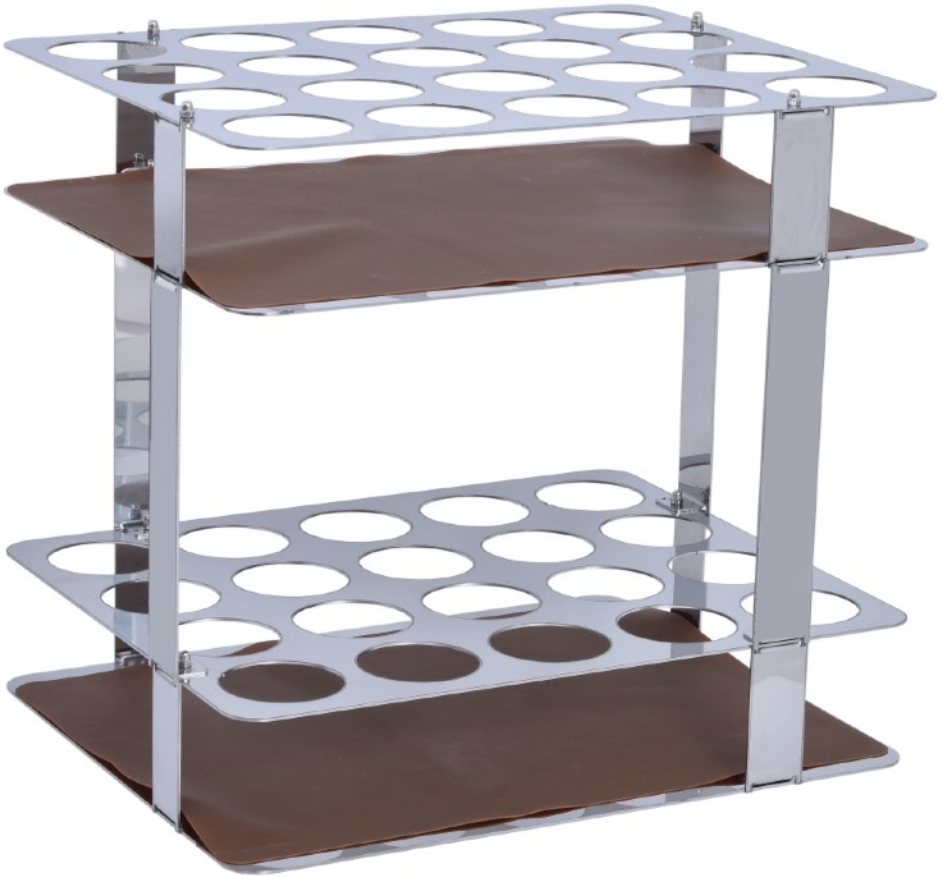

230.00€ **(excl. VAT)**

Cone holder - double

Capacity: 40 cones
Size: H: 32cm W: 40cm D: 32cm
Material: Stainless steel

Standard holder

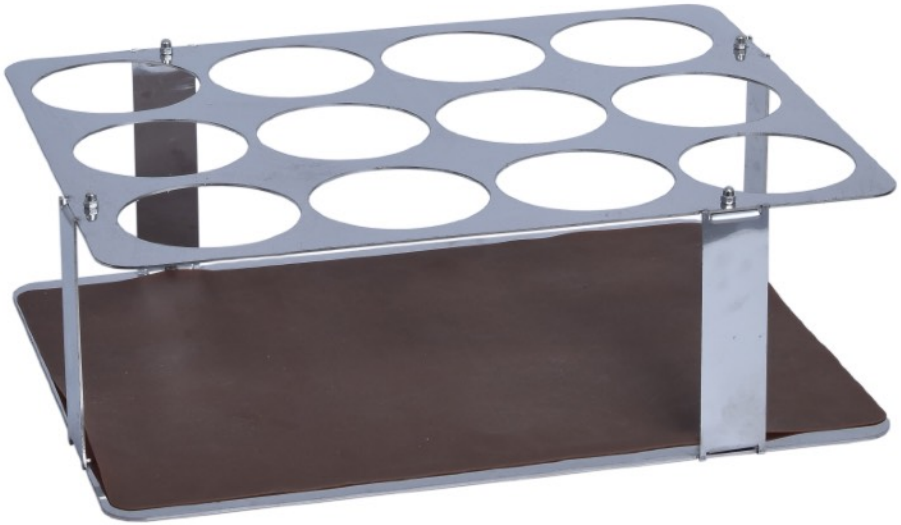

120.00€ **(excl. VAT)**

Standard holder

Capacity: 12 standard
Size: H: 10cm W: 40cm D: 30cm
Material: Stainless steel

3D Kurtos model

370.00€ **(excl. VAT)**

3D Kurtos model

Weight: 2,4kg
Size: H: 80cm
Diameter: 40cm

Toppings tray frame 6

230.00€ **(excl. VAT)**

Toppings tray frame

Capacity: 6 x Gastronorm (GN) food pans 1/2 (GN): 325mm length x 265mm width x 65mm deep

Size: H: 35cm W: 82cm D: 35 - 55cm (adjustable)

Material: Stainless steel

PLEASE NOTE: PANS / TRAYS & LIDS ARE NOT INCLUDED; YOU NEED TO PURCHASE THESE SEPARATELY FROM A LOCAL CATERING SUPPLY COMPANY.

Toppings tray frame 4

210.00€ **(excl. VAT)**

Toppings tray frame

Capacity: 4 x Gastronorm (GN) food pans 1/2 (GN): 325mm length x 265mm width x 65mm deep

Size: H: 35cm W: 56cm D: 35 - 55cm (adjustable)

Material: Stainless steel

PLEASE NOTE: PANS / TRAYS & LIDS ARE NOT INCLUDED; YOU NEED TO PURCHASE THESE SEPARATELY FROM A LOCAL CATERING SUPPLY COMPANY.

Kurtos paper serving

115.00€ **(excl. VAT)**

Kurtos paper cones

Quantity: 3600 pieces
Material: FSC certified, greaseproof paper
Weight: 10kg (3600 pieces)
Size: K14

Kurtos serving bags

85.00€ **(excl. VAT)**

0,04€ per piece (excl. VAT)

Kurtos serving bags

Quantity: 2000 pieces
Material: Polypropylene (PP)
Weight: 5,2kg (2000 pieces)
Length: 35cm
Width: 16cm

Serving bag holder - surface

80.00€ **(excl. VAT)**

Servings bag holder - surface

Material: Stainless steel

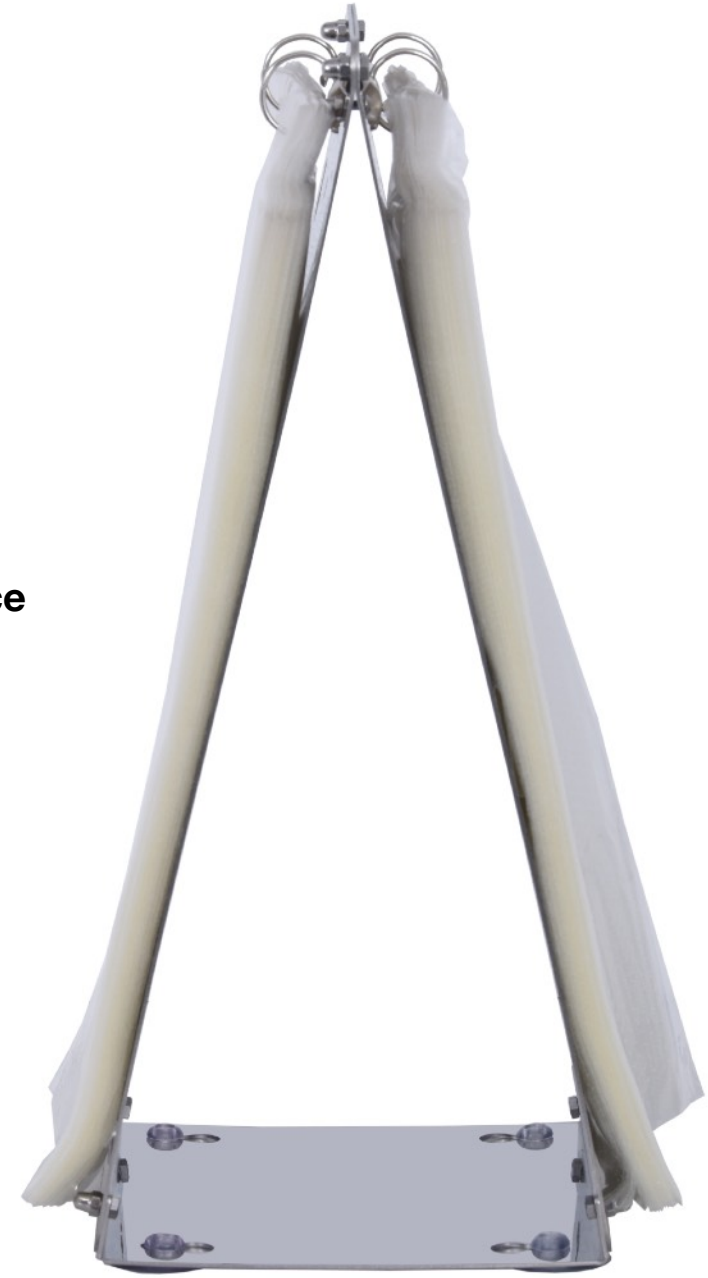

Serving bag holder - wall

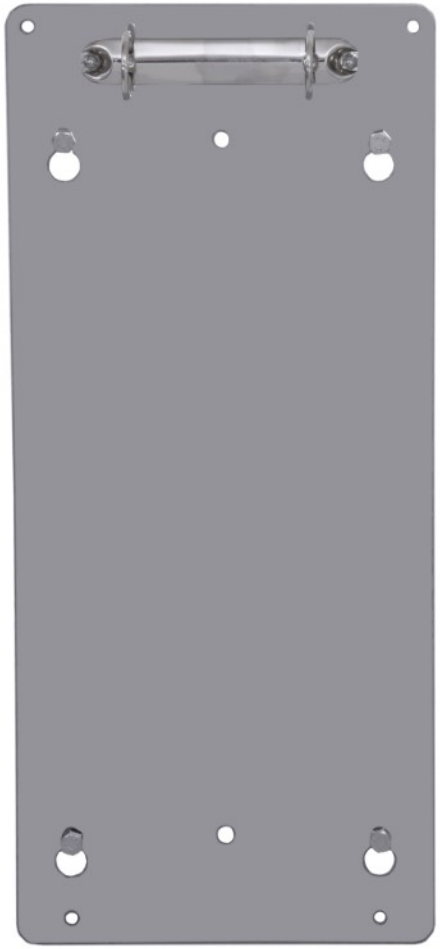

25.00€ **(excl. VAT)**

Servings bag holder - wall

Material: Stainless steel

Chocolate melters

210.00€ (excl. VAT)

Chocolate melter 1,5L (230V)

Capacity: 1.5L
Size: H: 8cm W: 40cm D: 30cm

220.00€ (excl. VAT)

Chocolate melter 1,5L (120V)

Capacity: 1.5L
Size: H: 8cm W: 40cm D: 30cm